Paisley Market and Trails

The Paisley Market and Trails adaptive reuse renovation was designed to reflect the existing construction of the mill while integrating passive house strategies within the addition of a rear staircase. This staircase includes large triple pane windows that are facing north to allow for natural daylight while not having direct sun that would heat the interior space. The wall assembly includes Zip panel sheathing that not only acts as a weather barrier but also creates a continuous layer of insulation around the structure. The heavy timber structure mirrors that of the historical mill and ties into the existing structure. Since the ground floor is raised above grade a double layer of rigid insulation plus batt insulation between the floor joists have been provided to increase the R-value of the floor and mitigate draft coming through the floor assembly. A large deck and awning was also added to the design to create an outdoor market space for locals to enjoy fresh produce and goods. Although a staircase is a smaller scale addition it was still important to strategically place openings and materials to increase energy conservation and alleviate thermal bridge so that the building becomes a high-efficient structure saving energy for generations to come.

1 GABLE END OF ROOF

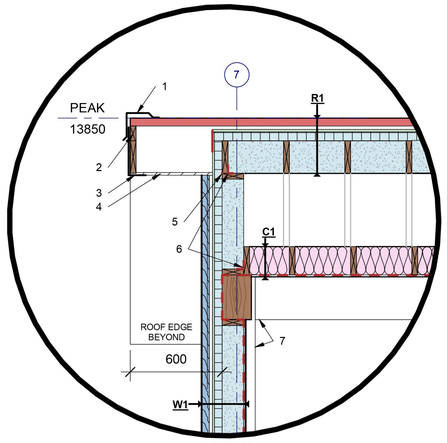

2 WINDOW HEADER & SILL

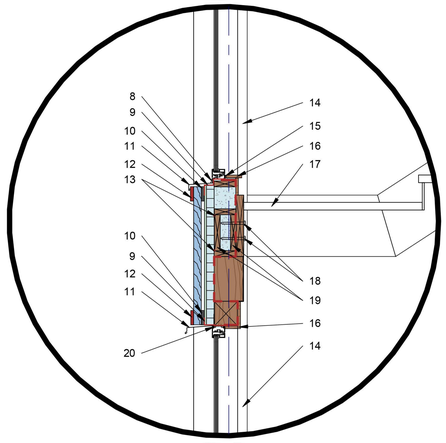

3 FOUNDATION @ 1ST FLOOR

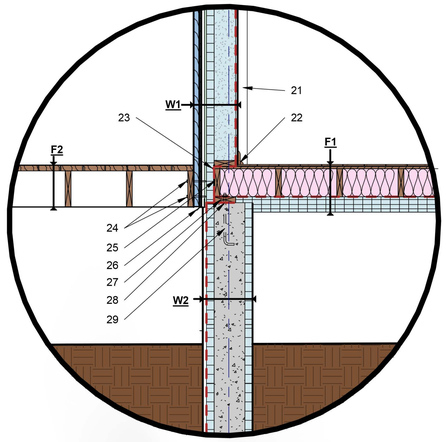

R1- STANDING SEAM METAL ROOF

44MM LOKSEAM METAL ROOF IN COLOUR BRITE RED
20 MM AIR SPACE W/ 20MM X 20MM WD FURRING @ 600MM O.C.
64 MM R12 ZIP INSULATION SHEATHING PANNEL
38MM X 184MM WD JOISTS @ 400MM O.C. W/ HD POLYURETHANE SPRAY FOAM INSULATION BTWN

C1- TYPICAL CEILING ASSEMBLY

38MM X 184MM CEILING JOISTS @ 400 O.C. WITH STC BATTS BTWN
6 MIL POLY VAPOUR BARRIER
12.7MM G.W.B.

DETAIL ITEMS

1. EDGE FLASHING
2. WOOD BLOCKING
3. FLASHING
4. VENTED SOFFIT
5. CONTINUOUS BEAD OF SEALANT
6. ALL SEAMS TAPED
7. BEAM AND COLUMN BEYOND

W1- BOARD AND BATTON SIDING ON WD STUD

50 MM ROYAL BOARD AND BATTEN SIDING IN COLOUR BLUE GREY
20 MM AIR SPACE W/ 20MM X 20MM WD FURRING @ 600MM O.C.
63 MM R12 ZIP INSULATION SHEATHING PANNEL
38MM X 140MM WD STUDS @ 400MM O.C. W/ HD POLYURETHANE SPRAY FOAM INSULATION BTWN
6 MIL VAPOUR BARRIER
13MM G.W.B.

DETAIL ITEMS

8. SEALANT
9. TAPE- OVER LAP VAPOUR BARRIER
10. INSECT SCREEN
11. METAL FLASHING WITH DRIP EDGE
12. WOOD TRIM PAINTED RED
13. CONTINUOUS BEAD OF SEALANT
14. COLUMN BEYOND
15. BACKER ROD AND SEALANT
16. INTERIOR WOOD TRIIM
17. STAIR ASSEMBLY
18. 2- M16 X 150MM LAG BOLTS AT 600MM O.C.
19. 38MM X 184MM WOOD BLOCKING TO SUPPORT STAIR ASSEMBLY
20. BACKER ROD AT PERIMETER OF WINDOW, FILL WITH SPF

W2- ICF FOUNDATION WALL

5MM CONCRETE PARGING
20MM DIMPLED DRAINAGE MAT
6 MIL POLY AIR BARRIER
300MM ICF BLOCKS BY AMVIC

F1- WD FLR ON 38MM X 184MM JOISTS

10MM WD FLOORING
5 MM QUIETWALK FLOOR UNDERLAYMENT
13MM FLOOR SHEATHING
38MM X 184MM WD FLOOOR JOISTS @ 400MM O.C. W/ BATTS BTWN
6MIL POLY AIR BARRIER
2 X 50MM RIGID INSULATION - SEAMS LAPPED

F2- WOOD DECK

38MM X 140MM WD DECK BOARDS
38MM X 235MM WD JOISTS @ 400MM O.C.

DETAIL ITEMS

21. COLUMN BEYOND
22. BASEBOARD AND SHOE
23. CONTINUOUS BEAD OF SEALANT
24. 2 - M10 X 120MM LAG BOLT @ 600MM O.C.
25. VAPOUR BARRIER- TIE INTO AIR BARRIER WITH TAPE
26. METAL FLASHING
27. 38MM X 140MM SILL PLATE
28. EPDM GASKET
29. M10 X 300MM BENT ANCHOR BOLT

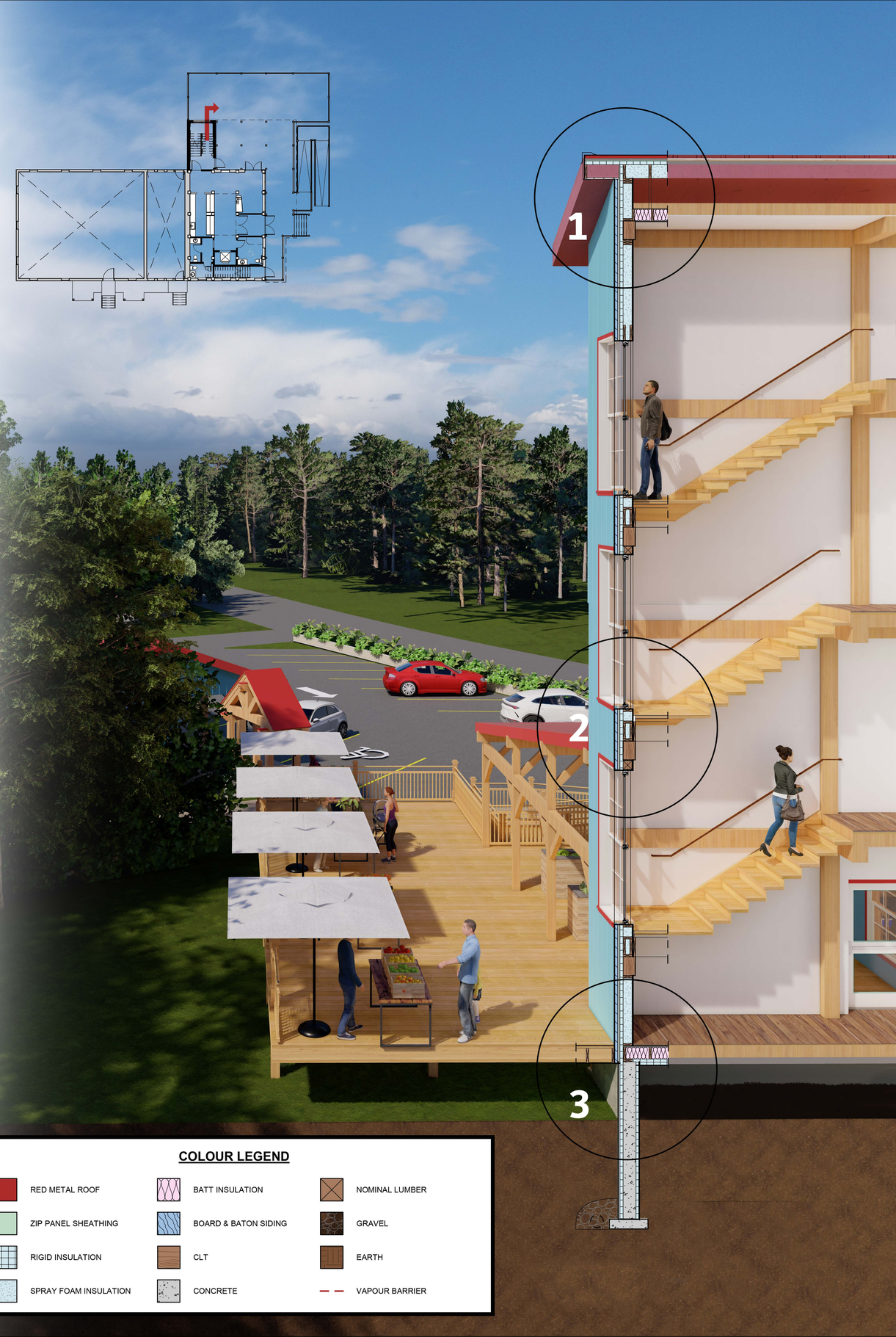

COLOUR LEGEND

RED METAL ROOF	BATT INSULATION	NOMINAL LUMBER
ZIP PANEL SHEATHING	BOARD & BATON SIDING	GRAVEL
RIGID INSULATION	CLT	EARTH
SPRAY FOAM INSULATION	CONCRETE	VAPOUR BARRIER